Hoop Grip MC8

Production from Jan.2018

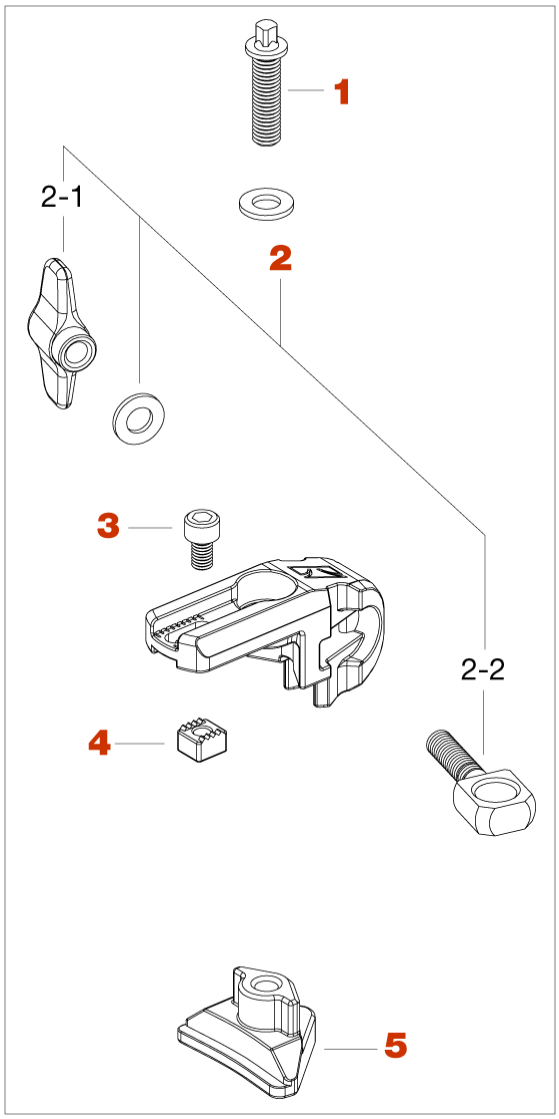

No.	Model No.	Description
1	MS830SH	**Square head bolt (M8x30mm)**
2	EBA830WN	**Bolt, washer & nut assembly**
2-1	WN8P	**Wing nut (2pcs/pack)**
2-2	EBA830	**Eye bolt (M8x30mm)**
3	L612C	**Screw (M6x12mm)**
4	MC8B	**Adjust nut**
5	MC8A	**Clamp casting**